Model NR3XL

Water Pressure Reducing Valve with Integral Strainer with Composite Bell Housing

TAG

Application

Ideal for use where Lead-Free* valves are required. Designed for installation on potable water lines to reduce high inlet pressure to a lower outlet pressure. The integral strainer makes this device most suitable for residential and commercial water systems that require frequent cleaning of sediment and debris. The direct acting integral by-pass design prevents buildup of excessive system pressure caused by thermal expansion. The balance piston design enables the regulator to react in a smooth and responsive manner to changes in system flow demand, while at the same time, providing protection from inlet pressure changes. The sealed cage washer and stainless steel adjustment bolt and nut improve corrosion resistance for all applications including below-ground pit installation.

Standards Compliance

- ASSE® Listed 1003
- cUPC® Listed
- CSA® Certified B356
- Meets the requirements of NSF/ANSI/CAN 61 and 372*

*(0.25% MAX. WEIGHTED AVERAGE LEAD CONTENT)

Materials

Main Valve Body	Low Lead Cast Bronze ASTM B584
Bell Housing	UV resistant polymer composite
Cartridge	Delrin®
Elastomers	EPDM (FDA approved)
	Buna Nitrile (FDA approved)
Internals	300 Series Stainless Steel
Springs	302 Stainless Steel
Stem and Plunger	Low Lead Brass
Strainer Screen	300 Series Stainless Steel

Features

Sizes 1/2", 3/4", 1", 1-1/4", 1-1/2", 2"	
Max. working water pressure (1/2" - 1-1/4")	400 psi
Max. working water pressure (1-1/2" - 2")	300 psi
Max. working water temperature	140°F
Reduced pressure range (1/2" - 1-1/4")	15 to 75 psi
Reduced pressure range (1-1/2" - 2")	25 to 75 psi
Factory preset	50 psi
Threaded connections (FNPT)	ANSI B1.20.1
Copper connections (FC)	ANSI B16.22
CPVC tailpiece Max. hot water temp.	140°F @ 100 psi
Cold water rated temp.	73.4°F @ 400 psi

1" NR3XL

Options (Suffixes can be combined)

	Standard with single union FNPT connection and 20 mesh strainer screen
DM	With double male meter thread connections (3/4" and 1" only)
HRSC	High Range 15-125 psi (1/2"-1-1/4" only) with sealed cage
C	Single union copper sweat x FNPT
DU	Double union FNPT x FNPT
DULU	With two integral FNPT connections (no unions)
PEX	with male barbed connection tailpiece for crossed-linked polyethylene tubing (1/2" - 1" only)
PEXF1960	With male barbed connection PEX tailpiece conforming to ASTM F1960 (1/2" - 1" only)
CPVC	CPVC tailpiece connection (3/4"-1")
DUPF	With 2 Z-Bite™ push fit tailpiece connection 250 psi max pressure (1/2"-1" only)
DUPR	With 2 Z-Press™ push fit tailpiece connection 250 psi max pressure (3/4" and 1" only)
P	Tapped and plugged for gauge
G	Tapped and plugged with gauge

Accessories

- Repair Kits (1/2" - 2")
- Tailpiece Kit, 1/2" - 2" FNPT Lead Free TPKXL
- Retrofit Kit, Extends body length of 1-1/4" NR3XL to match 1-1/4" 70DU for easy retrofit **RFK-114NR3XL**
- Tailpiece Kit, 3/4" Press Fit Lead Free 34-TPKXLPR
- Tailpiece Kit, 1" Push Fit Lead Free **1-TPKXLPF**
- Tailpiece Kit, 1" Press Fit Lead Free **1-TPKXLPR**
- Tailpiece Kit, 3/4" Press Fit Lead Free **34-TPKXLPF**

Design and dimensional data (inches and [mm]) are subject to manufacturing tolerances and change without notice.

Dimensions & Weights (do not include pkg.)

SIZE		CONNECTIONS	DIMENSIONS (approximate)								WEIGHT	
			A		B		C		D			
in.	mm		in.	mm	in.	mm	in.	mm	in.	mm	lbs.	kg
1/2	15	SINGLE UNION	4 3/8	111	6 1/4	159	1 1/8	29	2 1/2	64	3	1.5
1/2	15	ROUGH IN	3 3/4	95	SAME AS LESS UNION							
1/2	15	LESS UNION	3 1/2	89	6 1/4	159	1 1/8	29	2 1/2	64	3	1.5
1/2	15	DOUBLE UNION	5 1/4	133	6 1/4	159	1 1/8	29	2 1/2	64	3	1.5
3/4	20	SINGLE UNION	4 7/16	113	6 1/4	159	1 1/8	29	2 1/2	64	3	1.5
3/4	20	ROUGH IN	3 3/4	95	SAME AS LESS UNION							
3/4	20	LESS UNION	3 1/2	89	6 1/4	159	1 1/8	29	2 1/2	64	3	1.5
3/4	20	DOUBLE UNION	5 3/8	137	6 1/4	159	1 1/8	29	2 1/2	64	3	1.5
3/4	20	DOUBLE MALE METER	3 5/8	92	6 1/4	159	1 1/8	29	2 1/2	64	3	1.5
1	25	SINGLE UNION	4 15/16	125	6 1/4	159	1 1/8	29	2 1/2	64	4	2
1	25	ROUGH IN	4 1/4	108	SAME AS LESS UNION							
1	25	LESS UNION	4	102	6 1/4	159	1 1/8	29	2 1/2	64	3.5	1.6
1	25	DOUBLE UNION	5 15/16	151	6 1/4	159	1 1/8	29	2 1/2	64	4.5	2.1
1	25	DOUBLE MALE METER	4	102	7 3/4	197	1 3/16	30	3	76	4	2.0
1 1/4	32	SINGLE UNION	6 3/16	157	7 3/4	197	1 3/16	30	3	76	5.5	2.5
1 1/4	32	ROUGH IN	5 1/4	133	SAME AS LESS UNION							
1 1/4	32	LESS UNION	5	127	7 3/4	197	1 3/16	30	3	76	5	2.3
1 1/4	32	DOUBLE UNION	7 3/8	187	7 3/4	197	1 3/16	30	3	76	6	2.7
1 1/2	40	SINGLE UNION	6 5/16	160	8 1/2	216	1 3/4	45	3 3/4	95	6.6	3
1 1/2	40	ROUGH IN	5 1/4	133	SAME AS LESS UNION							
1 1/2	40	LESS UNION	5	127	8 1/2	216	1 3/4	45	3 3/4	95	5.5	2.5
1 1/2	40	DOUBLE UNION	7 1/2	191	8 1/2	216	1 3/4	45	3 3/4	95	7.7	3.5
2	50	SINGLE UNION	6 1/4	159	8 1/2	216	2	51	3 3/4	95	8.1	3.7
2	50	ROUGH IN	5 1/4	133	SAME AS LESS UNION							
2	50	LESS UNION	5	127	8 1/2	216	2	51	3 3/4	95	6.7	3
2	50	DOUBLE UNION	7 1/2	191	8 1/2	216	2	51	3 3/4	95	9.5	4.3

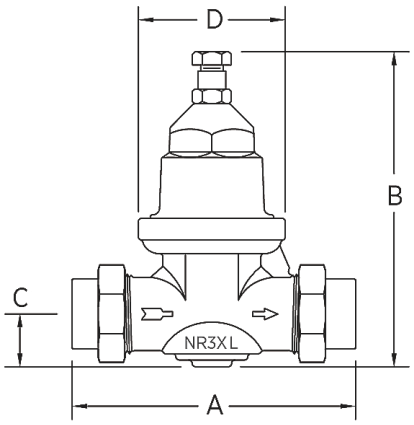

Flow Characteristics

◇Rated Flow (established by approval agencies)

MODEL NR3XL 1/2", 3/4" & 1" (STANDARD & METRIC)

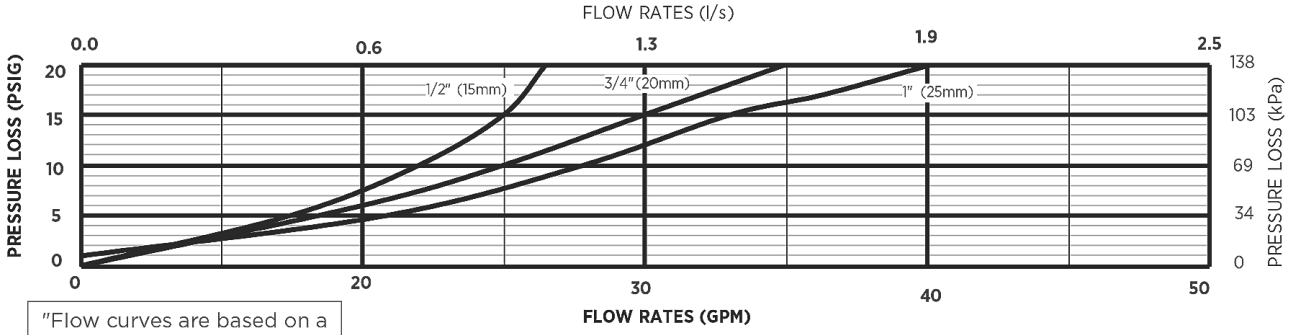

"Flow curves are based on a 50 psi pressure differential"

MODEL NR3XL 1-1/4", 1-1/2" & 2" (STANDARD & METRIC)

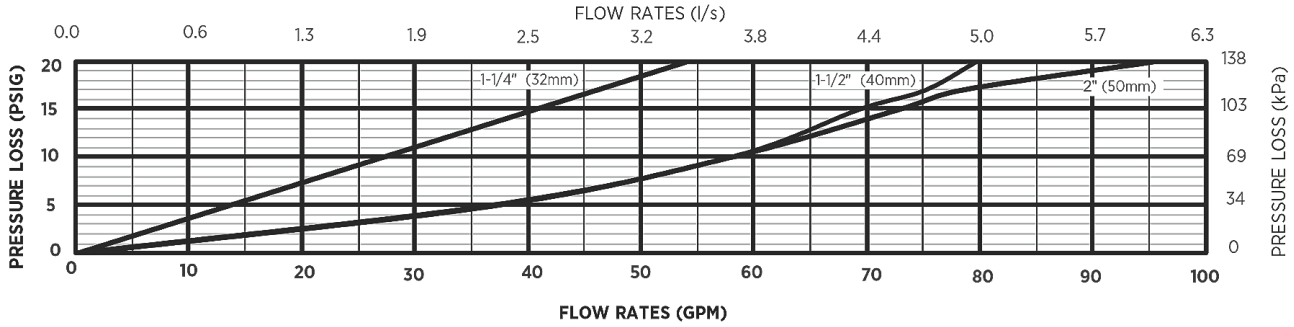

Typical Installation

Local codes shall govern installation requirements. Unless otherwise specified, the assembly shall be mounted in accordance with the latest edition of the Uniform Plumbing Code. The Model NR3XL may be installed in any position. The assembly shall be installed with sufficient side clearance for testing and maintenance. Multiple installations are recommended for wide demand variations or where the desired pressure reduction is more than 4 to 1 (ie: 200 psi inlet reduced to 50 psi outlet). CAUTION: Anytime a reducing valve is adjusted, a pressure gauge must be used downstream to verify correct pressure setting. Do not bottom adjustment bolt on bell housing.

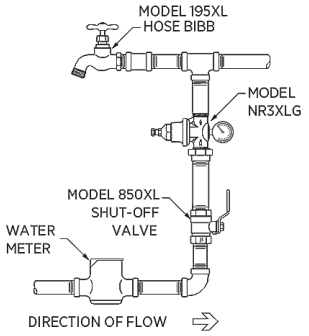

OUTDOOR INSTALLATION

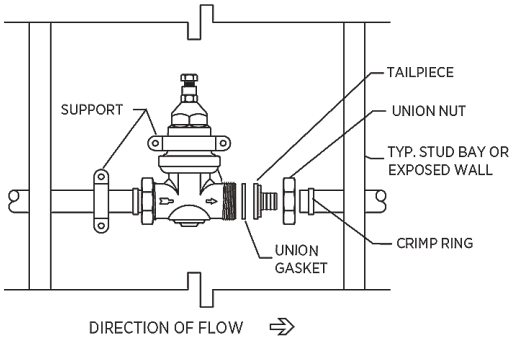

NR3XLDUPEX INSTALLATION

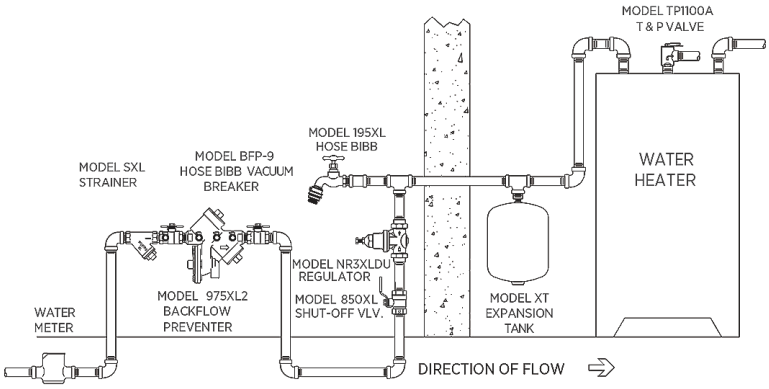

TYPICAL INSTALLATION

Installation and Maintenance Instructions - Model NR3XL

Specifications

The Water Pressure Reducing Valve shall be certified to NSF/ANSI/CAN 61 and ASSE® Listed 1003, available with single union, double union and less union end connections. The main body shall be low lead cast bronze (ASTM B 584) alloy. The bell shall be composite plastic. The cartridge shall be acetal and incorporate an integral seat. The seat disc elastomer shall be EPDM. The assembly shall be accessible for maintenance without removing the device from the line. The Water Pressure Reducing Valve shall be a WILKINS Model NR3XL.